Novel silencers and absorbers for wind tunnels and acoustic test cells

P. Brandstätt, H.V. Fuchs, M. Roller*

Abstract

Low frequency noise measurements in reverberation and free-field rooms require special attention as the sound field in this frequency range may be dominated by only a few modes (eigenfrequencies). This paper shows how reverberation rooms may be adequately damped to smooth the spatial sound field and to increase reproducibility and repeatability without violating the standards. Absorber modules and their operation principle are presented which are only 250 mm thick and are used as lining for test cells and wind tunnels providing free-field conditions down to 50 Hz for 1/3-octave band measurements. Their high acoustic effectiveness is proved by measurements in well-conditioned test rooms and with measurements in realized projects.

1. Introduction

The increasing demand for noise reduction and sound design at vehicles requires adequate test conditions in wind tunnels and engine test cells by designing and qualifying these special chambers as free-field rooms. State of the art are wedges or pyramids of porous absorbers with a length of at least a quarter wavelength of the lowest frequency for which free-field conditions have to be met. In its efforts to create non-fibrous, compact and robust alternatives for these conventional absorbers the Fraunhofer-Institut für Bauphysik (IBP) has developed a special broadband resonant absorber which shows high absorption efficiency down to 20 Hz with a total lining thickness of only 250 mm and an even surface. This new Compound Baffle Absorber (CBA) or Broadband Compact Absorber (BCA) allows to create class 1 free-field rooms for measurements in 1/3-octave frequency bands.

* Faist Anlagenbau GmbH

But also the flow noise in wind tunnels has to be minimized for aerodynamic noise measurements at the test specimen and demands for effective silencers over the whole frequency range. If these silencers can be made in a way to spoil minimum space the resulting top speed will be reduced only by a small amount. For this purpose also BCA modules are used as splitter silencers and tunnel wall linings. In the corners turning vanes coated with foam are employed for minimized pressure loss and additional mid- and high frequency attenuation. These absorbers developed at the IBP have been applied already to different wind tunnels and automotive acoustic test cells.

2. Modal sound fields in hard-walled rooms

The walls of rooms the dimensions of which are very large compared to the acoustic wave length λ involved may be made as sound-reflective as possible to make the sound field within it as diffuse (or uniform) as possible in order to enable the sound power of a source emitting into the room to be easily determined via time- and space-averaged sound pressure levels. Likewise the smooth decay of a sound pressure field as a function of time may be taken as a measure of the equivalent absorption area of a test object lining part of the otherwise hard-walled boundaries of the room. In an alternative approach, the properties of the test room may be eliminated by lining its walls with sound absorbent wedges or pyramids the depths of which should exceed $\lambda/4$, thus leaving a source or other test object in something equivalent to a free-field (or undisturbed by reflecting obstacles) environment. A group of room and building acoustic measuring and rating procedures rely on one of these two opposite test room concepts. At frequencies where the wave lengths and room dimensions are of the same order of magnitude, however, it seems impossible, according to the present state of the art, to either create an approximately diffuse or free sound field by establishing sufficiently reflective or anechoic environments. This dilemma is due to the fact that any hollow space of cubic, rectangular or arbitrarily skewed geometry inevitably resonates at its eigenfrequencies (Fig. 1) resulting in extreme inhomogeneities in the frequency (Fig. 2) and time domain as well as in space [1]. Fig. 3 shows e.g. the (1,1,0)-mode shape at 55 Hz of a 5 x 4 x 3 m³ room with pressure level differences of more than 30 dB being

measurable between the corners and the center of the room in a plane 1.3 m above the floor.
These mode fields dominate below 100 Hz, even for ordinary measurements which are normally performed in third-octave bands, for any of the existing standard rooms used world-wide. Even at somewhat higher frequencies most laboratories find it necessary to introduce more or less appropriate sound absorbing elements into their otherwise hard-walled test cells to increase repeatability and reproducibility of the test results with rotating microphones in the middle of the rooms. This technique of smoothing modal fields may be decisively improved and extended to frequencies below 50 Hz by employing CBA modules as appropriate damping modules.

3. Sound Absorber Construction

The principle construction of the new Compound Baffle Absorber [2] is shown in Fig. 4 and consists of a rectangular melamine foam layer (2) with a steel plate (1) fixed on top by an adhesive layer (3). The foam layer itself has to be fixed by a second adhesive layer (4) to a hard wall. The complete absorber is produced in elements with a size of at least 1500 mm by 1000 mm and may be protected by a casing (5). The depth D of the complete absorber does usually not exceed 100 mm which is very much smaller than the wavelength of the low frequency sound to be absorbed. The fixing of the steel plate is done in such a manner that the plate can vibrate freely, i.e. there is no clamped boundary condition.
The absorption capability of the CBA is provided by two well known mechanisms described in any acoustics text book. The first is a mass-spring resonator formed by the plate acting as mass and the foam layer acting as the spring. The resonance frequency of this system may be estimated by

$$f_R = \frac{c_d}{2\pi} \cdot \sqrt{\frac{\rho_d}{\rho_t \cdot t \cdot d}} \quad [\mathrm{Hz}], \qquad (1)$$

with c_d [m/s] the speed of sound in the porous absorber, ρ_d an ρ_t the density in kg/m^3 of the absorber and the plate, respectively. The thickness of the plate is

t [m] and d [m] of the absorber. The second mechanism is due to the free vibrations of the plate,

$$f_{x,y} = \frac{\pi}{2} \cdot \sqrt{\frac{B'}{m''}} \cdot \left[\left(\frac{x}{L_x} \right)^2 + \left(\frac{y}{L_y} \right)^2 \right] \quad [\mathrm{Hz}] \quad , \qquad (2)$$
$$B' = \frac{E \cdot t^3}{12 \cdot \left(1 - \mu^2\right)}, \qquad x, y = 1, 2, 3, \ldots$$

where E [N/m^2] denotes Young's modulus, $\mu \cong 0.35$ and m´´ [kg/m^2] the mass per unit area. L_x [m] and L_y [m] are the plate dimensions, x and y are integers representing the order of the mode. The plate is undergoing elastic deformation as reaction to the incident sound and has an increased inner friction provided by the adhesive connection with the foam layer. Even at low frequencies many modes are present on the plate which may couple to room modes, for example, and thereby increase the absorption at these room modes. By variation of the plate thickness (and dimension) the CBA may be tuned for optimized absorption in a specific frequency band. If the casing of the CBA (5 in Fig. 4) is closed on all sides then only low frequency absorption in the range from 25 Hz to 125 Hz is provided by the CBA. This frequency range may be extended to approximately 500 Hz if these small sides of the casing are left open. Then, the incident sound is diffracted into and absorbed by the open pore foam material.
For the construction of the Broadband Compact Absorber BCA [3-5] a second layer of foam with a thickness of typically 150 mm is fixed on top of the steel plate by an additional adhesive layer (Fig. 5). An efficient sound absorber for the whole frequency range with a total thickness of only 250 mm is achieved by this sandwich construction.

4. Absorption coefficient measurement

There are two standardized methods for the measurement of sound absorption. The reverberation room method [6] is based on a diffuse sound field in the room. For reverberation rooms with regular sizes of about 200 m³ or more the lower frequency limit lies well above 125 Hz for third-octave measurements. The impedance tube method [7] on the other hand measures the impedance and

the absorption coefficient in narrow frequency bands for normal incidence. This method has its low frequency limits due to the longitudinal dimensions of the tube. The results of both test procedures show a considerable influence of the respective mounting conditions for the test specimen within the respective boundaries. Any application of such laboratory data under varying room acoustic circumstances therefore always requires some practical experience, particularly so at the lower frequencies. On the other hand, it is the absorption efficiency of acoustic materials at very low frequencies which is of growing interest in noise control and room acoustic design tasks. All measurements of sound absorption in regularly sized rooms at low frequencies below 100 Hz have to realize and accept the physics of the modal sound field described above. Efficient absorption at very low frequencies either requires huge lining depths (exceeding 1 m) or large plane modules as the CBA modules. Neither can be tested in a conventional impedance tube. Its effective absorption coefficient may, however, be measured in a reverberation or ordinary rectangular room down to its lowest modes, by evaluating their corresponding decay times at selected locations in the room. It is related to the standardized method but takes care of the unavoidable influence of modal sound fields. This method allows to compare effective absorption coefficients of different types of absorbers to develop new sound absorbers and to optimize components in small rooms.

First, the eigenfrequencies in the test room are deduced by measuring the transfer function of the empty room from one corner to the opposite corner (Fig. 2). The eigenfrequencies can be calculated with the well known formula [8]:

$$f_{(n_x,n_y,n_z)} = \frac{c}{2} \cdot \sqrt{\left(\frac{n_x}{L_x}\right)^2 + \left(\frac{n_y}{L_y}\right)^2 + \left(\frac{n_z}{L_z}\right)^2} \qquad (3)$$

$$n_x, n_y, n_z = 0, 1, 2, \ldots$$

with the modal indices n_x, n_y, n_z and the dimensions of the room in x-, y-, z-direction L_x, L_y, L_z. With the modal indices of the calculation and the eigenfrequencies of the room the modal shape of the eigenfrequencies in the laboratory can be obtained.

For low frequency absorption measurements, which is at third-octaves with 5 or less eigenfrequencies, each room mode is excited separately with a sine wave

signal. The decay times at a particular eigenfrequency without and with the test object in the room are measured. From these the (effective) absorption coefficient at this particular eigenfrequency can be calculated [6] according to the formula:

$$\alpha_{eff} = 55.3 \cdot \frac{V}{S \cdot c}\left(\frac{1}{T_2} - \frac{1}{T_1}\right), \tag{4}$$

with the decay (or "ringing") times T1 and T2 in the empty room and the room with test objects, respectively, volume V of the room, speed of sound c and surface S of the test objects.
In order to be able to excite all eigenfrequencies in the laboratory, the loudspeaker is placed in one corner of the room. The registration of the decay time of the eigenfrequencies can be achieved in principle by positioning one microphone in a corner of the room, where high sound pressure of all eigenmodes exist. Even though there are not many eigenfrequencies in a frequency band some of them lie very close together which can lead to beating effects in the decay curves. This makes it difficult to measure the decay times individually. To better separate the decays of the different eigenfrequencies, microphones are installed at well-selected positions in the laboratory, where the neighboring eigenfrequencies have a sound pressure knot (low sound pressure) and can not disturb the measuring results.
Depending on the location of the sound absorbers the structure of the modes in the room may slightly vary. Nevertheless, with an adequate small number of absorbers this effect is negligible and the effective absorption coefficient of the absorber at the eigenfrequencies can be determined using equation (4).
Fig. 6 shows absorption coefficients of CBA and a foam sample for comparison. The different modes are indicated by arrows. The results show a considerable dependence of the effective absorption coefficient on the type of mode at the respective eigenfrequency. Axial modes give systematically lower effective absorption coefficients than tangential modes, and oblique modes typically reach a relatively high value. The foam, for comparison, shows much less effective absorption at these frequencies.

By measuring at different microphone positions in the room it is possible to distinguish between the different eigenfrequencies. Installing the absorbers only in one direction at a time (see Fig. 7) and doing this in all three directions, one can present the absorption coefficient for the axial modes with the absorbers perpendicular to the mode orientation. This method makes it possible to eliminate the influence of the different types of modes on the results. Measurements of two different types of CBA absorbers are shown in Fig. 7. The depth of all CBA is 10 cm, the surface area of each absorber is 1,5 m². The number (1,0mm/2,5mm) indicates the thickness of the metal sheet of the CBA. The positioning in x-direction is also displayed in Fig. 7, in all other directions the procedure was analogous. The use of heavier metal sheets shifts the higher sound absorption to lower frequencies as expected. The effective absorption coefficient reaches sufficiently high values for practical applications. These measurements are much easier understood because they are made at the axial modes of the room and there is no influence of the different mode structures. On the other hand, there are not many eigenfrequencies to measure at. As this type of absorber is a highly damped baffle resonator with a wide band absorption property it is possible to gain information about the absorbers by applying this method. The few measuring points, however, make it impossible to evaluate the frequency of maximum absorption exactly. Narrowband absorbers as Helmholtz resonators also would be difficult to analyze with this method.

5. Conditioning of reverberation rooms

A second approach is presented which sticks to the universally adopted principle of testing sources, transmitters and sinks by spatial averages, obtained with microphones moving within approximately uniform sound fields. It goes without saying that in such a procedure the result will again depend, more or less, on the respective fixed location of the test object within the room (and mode field). It is possible, however, to come up with test results according to the standards mentioned before, which are sufficiently repeatable, reproducible and hence representative, if the lower eigenfrequencies of the room are suitably damped so as to yield a fairly uniform sound field in all three dimensions and also as a function of frequency.

Fig. 8 shows such an arrangement of adequate damping with just six CBA modules placed in two lower corners of the reverberation room. The area in the middle of the room indicates the placement of absorbers under test. Even if all four lower corners of that room were equipped with the same BCA modules, the allowed mean absorption coefficient α_m according to [9] is not exceeded at the low frequencies as the measurement plotted in Fig. 9 reveals.
With this technique it is possible to arrive at a fairly uniform sound field at low frequencies by damping the room modes thus enabling the measurement of absorbers in this frequency range. Fig. 10 shows the corresponding absorption coefficient as a function of frequency with the arrangement sketched in Fig. 8.
The new CBA modules are not only helpful for conditioning reverberation rooms used for absorption measurements but also for test cells used for sound power or transmission loss measurements of walls, for example. A detailed investigation about the amount of low frequency absorbers needed to decrease the standard deviation as much as possible without violating the measurement standards is presented in [10]. For sound power measurements in small rooms a coverage of 20% of the surface with CBA yielded the best compromise.

6. Application in wind tunnels and test cells

With these new absorbers several wind tunnel plenums and acoustic test cells have been realized already or are currently under construction. Apart from a reverberation room at the IBP which has been converted to a semi-anechoic chamber, the new motor test stand of BMW [4] presented on Fig. 11 was the first application of BCA modules as absorbent wall lining. The design of the BCA follows Fig. 5 with a total lining thickness of 250 mm. Resonator plates of different thickness are incorporated in the BCA and these different absorbers are evenly distributed over all 6 walls converting this rather small test stand with a raw volume of only 339 m^3 into a free-field room.

The principle design of such test cells is sketched on Fig. 12 with the complete separation of the room from the rest of the building, a foundation with vibration isolation and the wall lining as main parts. Strictly following ISO 3745 [11], one would require a raw volume of around 10000 m^3 for free-field measurements down to 50 Hz. With the employment of the BCA modules distributed

intelligently over the 6 walls, measurements as in free space are possible for frequencies below 50 Hz, at least for third-octave band noise, which suffices in a majority of practical circumstances. Fig. 13 shows the results of "draw-away" measurements at 50 and 800 Hz for a reference source replacing the source in the small engine test stand shown in Fig. 11. Likewise, the building- and room-acoustics consulting for a number of acoustic test facilities in the new Acoustics Center of VW in Wolfsburg have been more or less completed.

The first plenum that was fully equipped with BCA modules as wall lining is that of the new AUDI aero-acoustic wind tunnel [5]. Fig. 14 shows a photo with the BCA behind a perforate protection layer and in the background the movable absorber wall in front of the windows to the monitoring room. The design of the BCA follows again Fig. 5 with a total lining thickness of 250 mm. This results in a broadband absorption covering the whole low frequency range where room eigenfrequencies are dominant. The top layer of porous foam covers the remaining frequency range. With this installation the plenum fulfills the requirements for a class 1 semi free-field room down to 63 Hz in 1/3-octave bands.
A new application of BCA modules is their integration as splitter silencers. Fig. 15 shows a view to one of the two corners of the AUDI wind tunnel with such silencers placed diagonally into the corner. The silencer consists of double BCA modules enhancing the low frequency performance. The modules are separated in longitudinal direction by a rigid steel plate (Fig. 16). Shaped leading and tail cones are used to minimize pressure drop and are filled with open pore foam providing additional attenuation. The remaining two corners were equipped with foam coated guiding vanes similar to the wind tunnel of University Stuttgart [12]. The coating delivers additional attenuation in the mid- and high frequency range and a reduced pressure loss compared to the uncoated turning vanes.
As can be seen on Fig. 15, the cross-section of the wind tunnel ducts is usually rather big and offers the additional opportunity to treat the walls and ceiling with an acoustic lining. This concept was realized again for the first time at the diffuser (collector) section of the AUDI aero-acoustic wind tunnel. The design is sketched on Fig. 17. The originally planned lining required much more space than the BCA modules that were finally installed. Thus, a suspension

construction with a rigid back side formed by a closed steel plate was used for the mounting of the modules. The space to the concrete duct wall and ceiling was partially filled with foam absorber blocks in order to damp the enclosed space and to suppress flanking transmission.
All these measures, together with a carefully chosen fan, lead to the by far most silent wind tunnel in the world [13,14]. This is shown on Fig. 18 with an overview of the range of sound pressure levels measured for different kinds of wind tunnels.
While several anechoic test cells were completed for DaimlerChrysler in their new engineering and test center in Sindelfingen, the work for their new aero-acoustic wind tunnel in Auburn Hills is in progress. The plenum will be lined with BCA modules and is designed to deliver free-field conditions down to 80 Hz for measurements in 1/3-octave bands according to ISO 3745. It is expected that the frequency range can be extended to even lower frequencies. A large amount of the duct walls and ceiling will be lined with BCA modules directly mounted to the concrete wall. This will give an increased low frequency attenuation of the fan noise and the otherwise conventional splitter silencers in two of the corners can be reduced in their width. These means will keep the acoustic performance and the possible flow speed at a maximum while pressure loss is minimized. Like all other projects described here, the acoustic installations are all realized avoiding any fibrous material that can cause problems with respect to the flow measuring equipment.

7. Conclusion

Current trends in the immission of noise in buildings from internal and external sources call for a high acoustic performance of construction elements at frequencies below 100 Hz. It could be shown that the relevant measurement standards for the emission and absorption of sound may be extended down to 50 Hz with but slight modifications applied to the test cells by which the dynamics of its eigenmodes are suitably tamed so as to enable the determination of representative (i.e. repeatable and reproducible) averages of sound pressure levels and reverberation times. This enables future test certificates to contain reliable data at 80, 63 and 50 Hz. With these test methods it is possible to measure and assess new absorbers such as the CBA and BCA

presented here which are specifically designed for high low frequency performance. The application of such absorbers covers a wide range of acoustic test cells and wind tunnel plenums where free-field conditions have to be met. They are further applicable as splitter silencers and as duct linings if the ducts are at least of the same size as the absorber modules. Together with their acoustic performance they offer additional advantages due to their small thickness (CBA typically 100 mm and BCA typically 250 mm) saving an enormous amount of space. So far, a total of 22 anechoic test cells and plenums have been completed with room volumes ranging from 45 m^3 up to 2200 m^3.

8. References

[1] Zha, X. et al.: Measurement of an effective absorption coefficient below 100 Hz. Acoustics Bulletin 24 (1999), No.1, 5-10.

[2] Fuchs, H.V.; Zha, X.: Layout and acoustic efficiency of compound baffle resonators (in German). Zeitschrift für Lärmbekämpfung 43 (1996), 1, 1-8.

[3] Zha, X. et al.: A new concept for acoustic freefield rooms (in German). Rundfunktechnische Mitteilungen 42 (1998), 3, 81-91.

[4] Pfeiffer, G., et. al.: Modern testing techniques in BMW powertrain development - three new special test rigs. ATZ Worldwide 99 (1997), 7/8, 25-28.

[5] Schneider, S.; Wiedemann, J.; Wickern, G.: The Audi wind tunnel center (in German). Conference Proceeding "Vehicle Aerodynamics". Haus der Technik, Essen, 11.-12. Nov. 1998.

[6] ISO 354: Acoustics: Measurement of sound absorption in a reverberation room (1985).

[7] ISO 10534: Acoustics: Determination of sound absorption coefficient and impedance in impedance tubes (1996).

[8] Morse, P. M.: Vibration and Sound. Acoustical Society of America, 1936, Fifth printing 1995, 390 ff.

[9] ISO 3741: Acoustics – Determination of sound power levels of noise sources using sound pressure – Precision method for reverberation rooms (1999).

[10] Qualifying freefield and reverberation rooms for frequencies below 100 Hz. Applied Acoustics 59 (2000), No. 4, 303-322.

[11] ISO 3745: Acoustics – Determination of sound power levels of noise sources. Precision methods for anechoic and semi-anechoic rooms (1977).

[12] Potthoff, J.; Küstner, R.; Essers, U.: The aero-acoustic wind tunnel of Stuttgart University. SAE Paper 950625, Detroit, 1995.

[13] Hucho, W.-H.: Leise Autos aus flüsterndem Windkanal. VDI Nachrichten, 10. Nov. 2000.

[14] Schneider, S.; Wiedemann, J.; Wickern, G.: Das Audi-Windkanalzentrum – Aero-Akustik-Windkanal und Thermo-Blasenkanal. Conference "Aerodynamik des Kraftfahrzeugs", Haus der Technik, Essen, 1998.

9. Figures

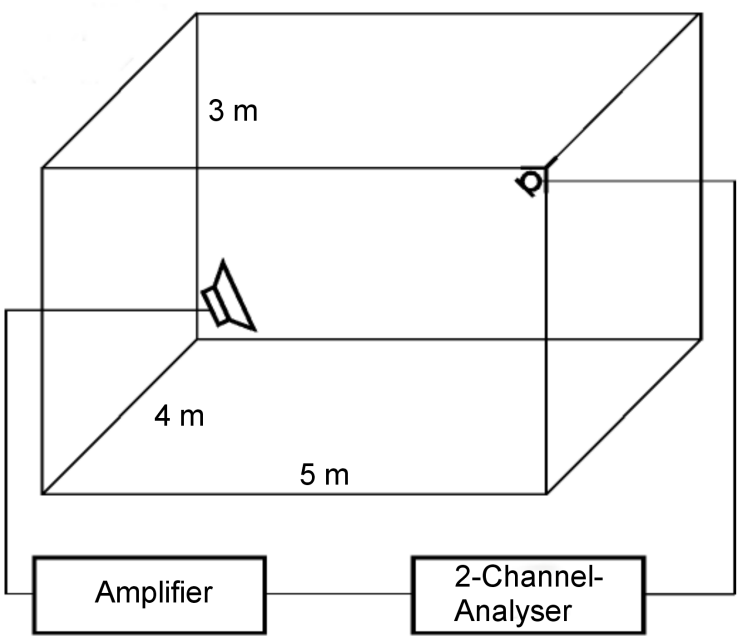

No.	Eigenfrequency [Hz]		Mode
	Measurement	Calculation	
1	35,0	34,3	1,0,0
2	42,5	42,9	0,1,0
3	55,5	54,9	1,1,0
4	56,3	57,2	0,0,1
5	66,1	66,7	1,0,1
6	68,9	68,6	2,0,0
7	70,6	71,5	0,1,1
8	78,8	79,3	1,1,1
9	80,5	80,9	2,1,0
10	85,5	85,8	0,2,0
11	89,0	89,3	2,0,1

Fig. 1: Eigenfrequencies of a rectangular room (60 m^3)

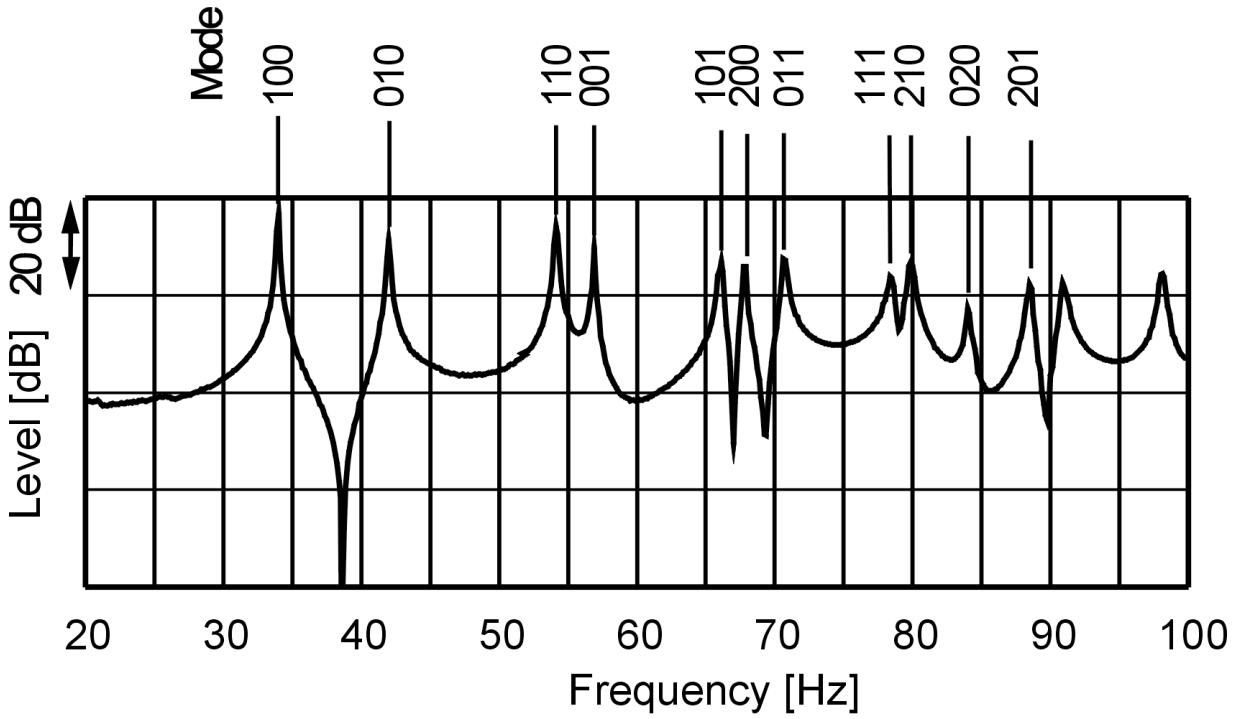

Fig. 2: Transfer function of a hard-walled rectangular room measured according to Fig. 1 as a function of frequency

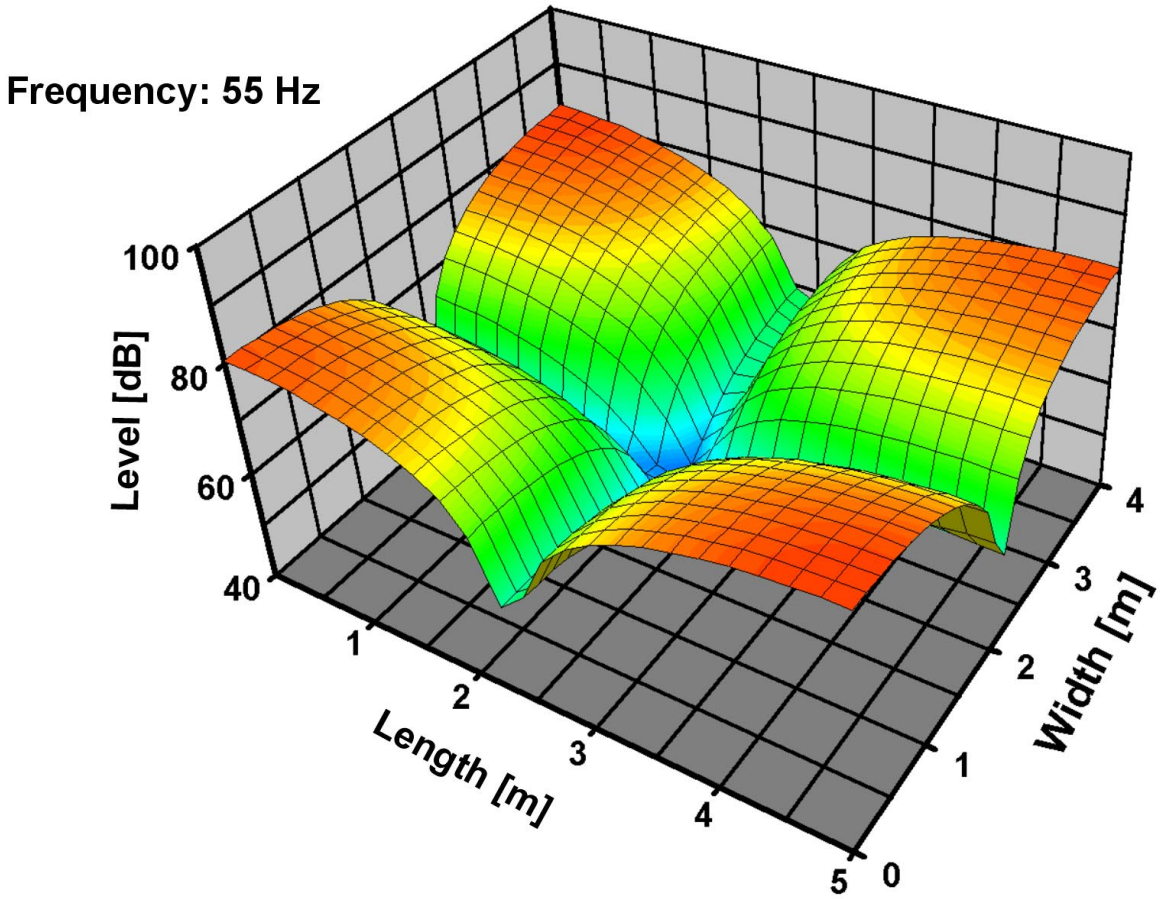

Fig. 3: Pressure level distribution in a plane 1.3 m above the floor of the (1,1,0) eigenmode at 55 Hz in the hard-walled room depicted on Fig. 1

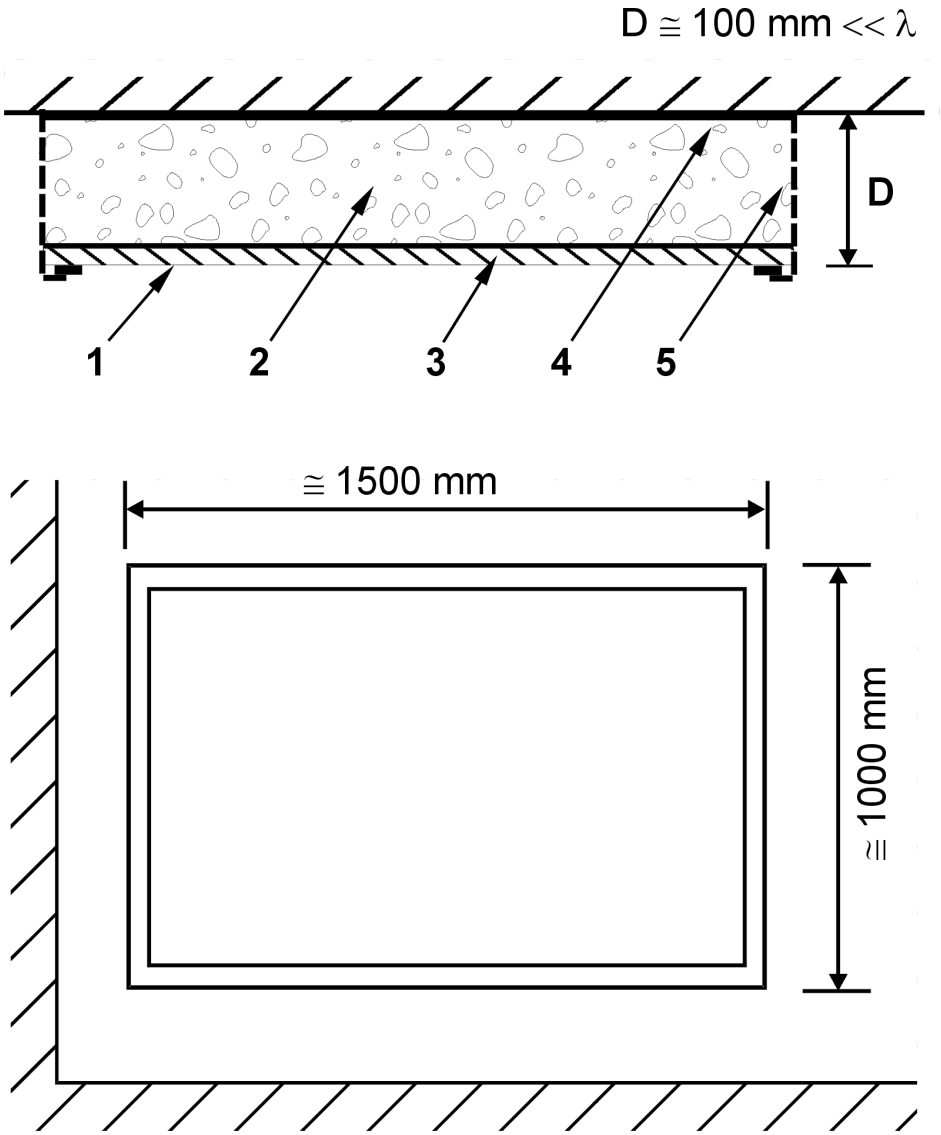

Fig. 4: Compound Baffle Absorber (CBA) [2].
1: Freely vibrating baffle (1 - 2,5 mm steel);
2: Resilient porous foam plate;
3, 4: Adhesive connecting layers;
5: absorber casing

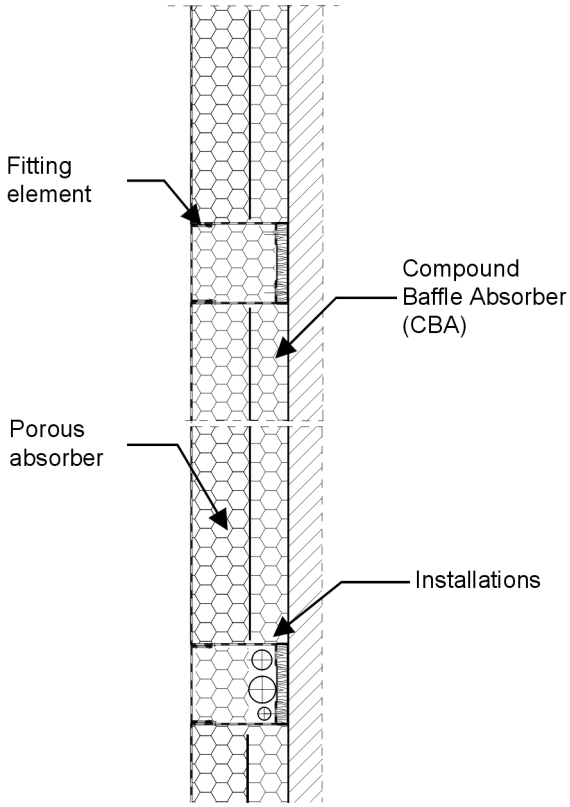

Fig. 5: Broadband Compact Absorber BCA as acoustic lining for free-field test rooms [3-5]

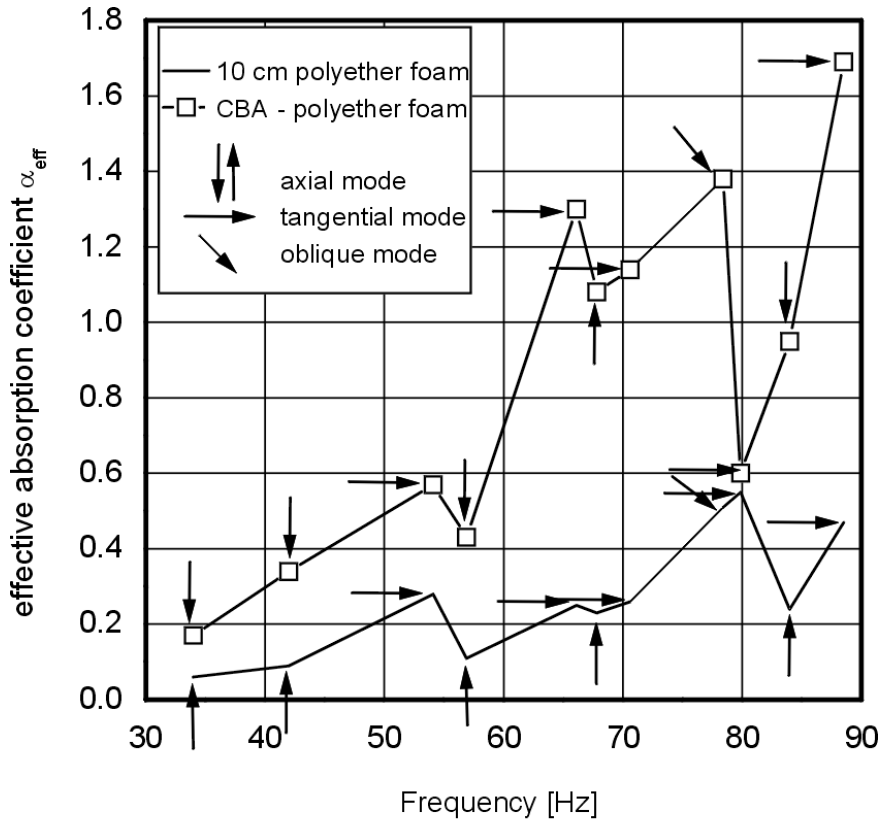

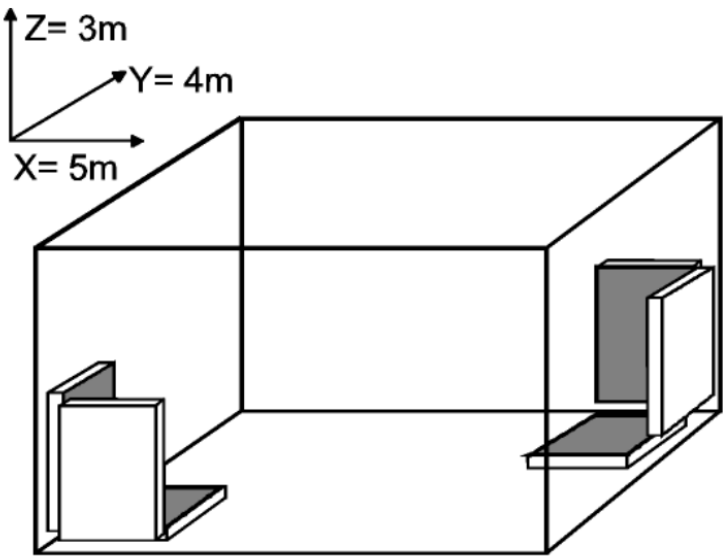

Fig. 6: Effective absorption coefficient of 6 CBA in comparison with 6 foam absorbers of the same size

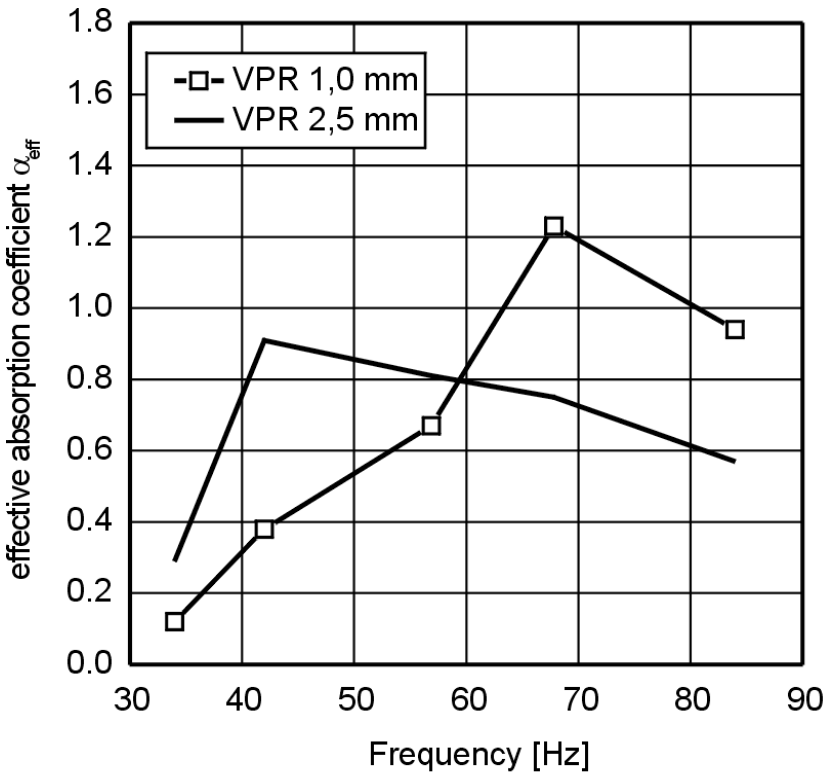

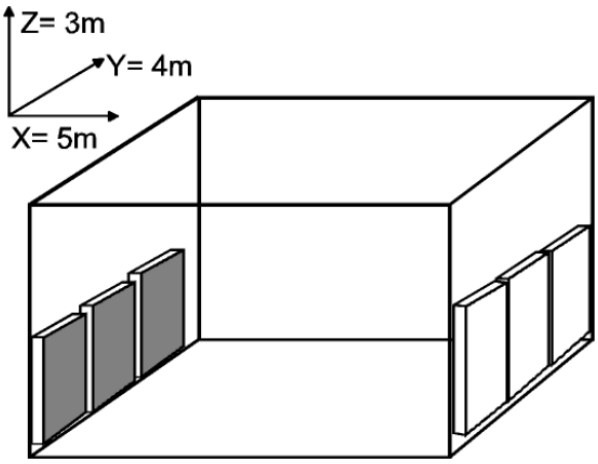

Fig. 7: Different CBA measured at the axial modes of the laboratory and placement of the 6 measured absorbers in the laboratory

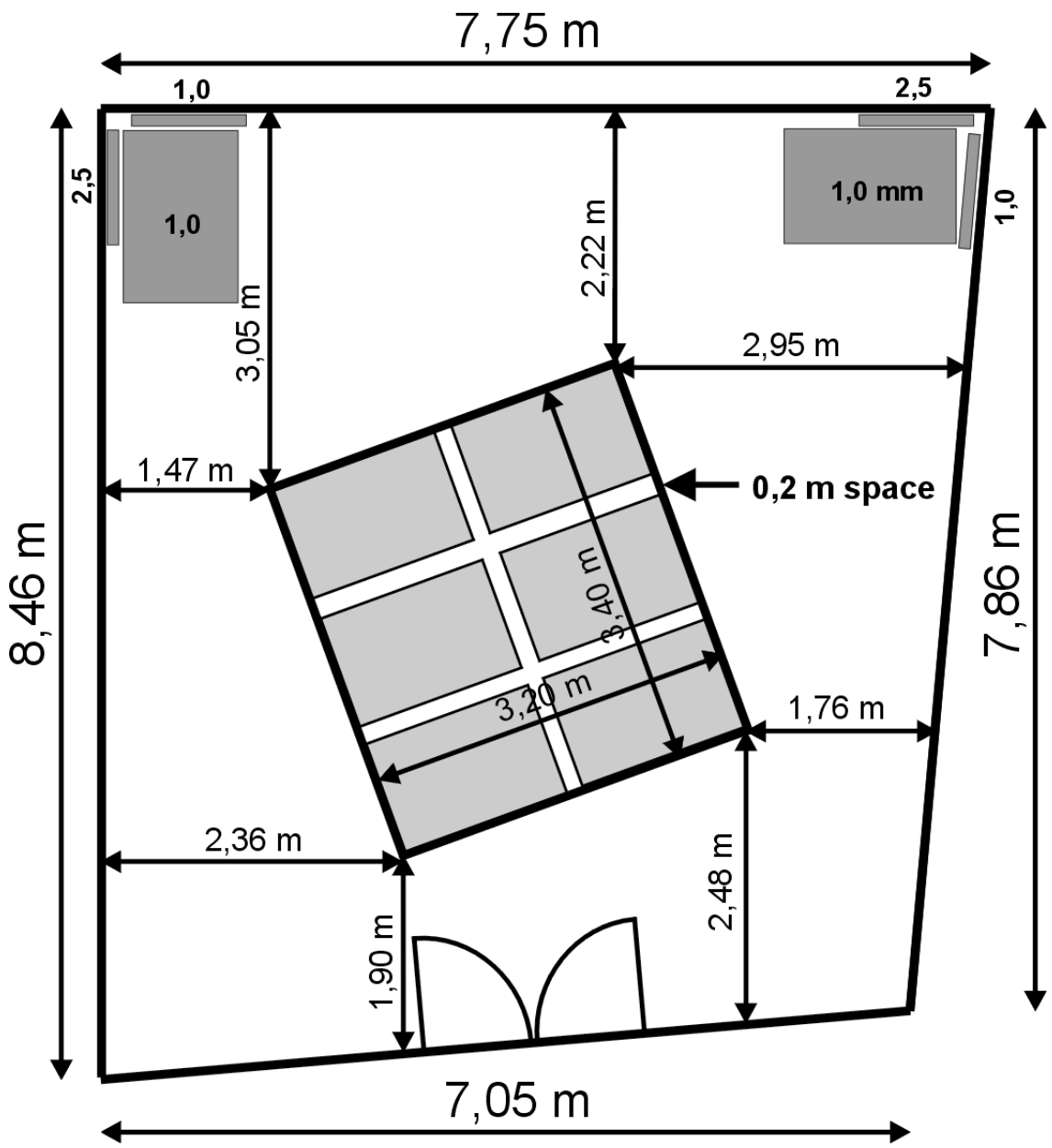

Fig. 8: Measurement of CBA and BCA modules in an adequately damped reverberation room

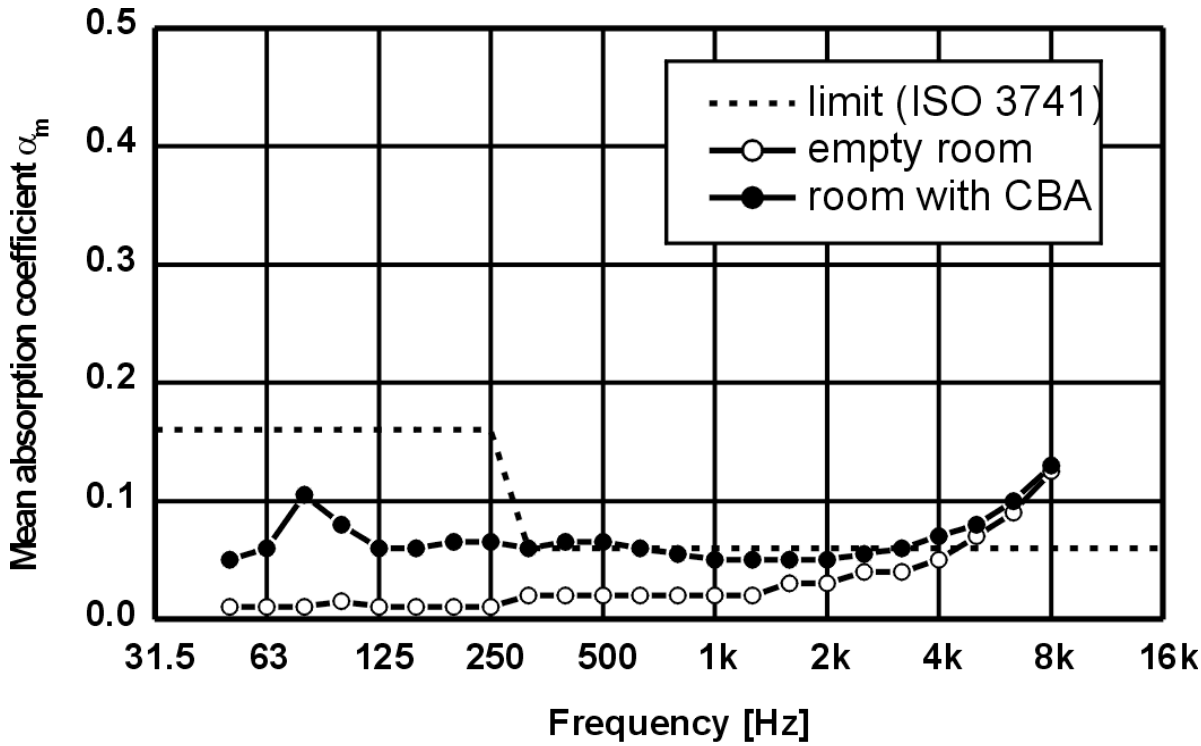

Fig. 9: Mean absorption coefficient in the reverberation room according to Fig. 8 but all four lower corners with CBA, measurement in 1/3-octave bands

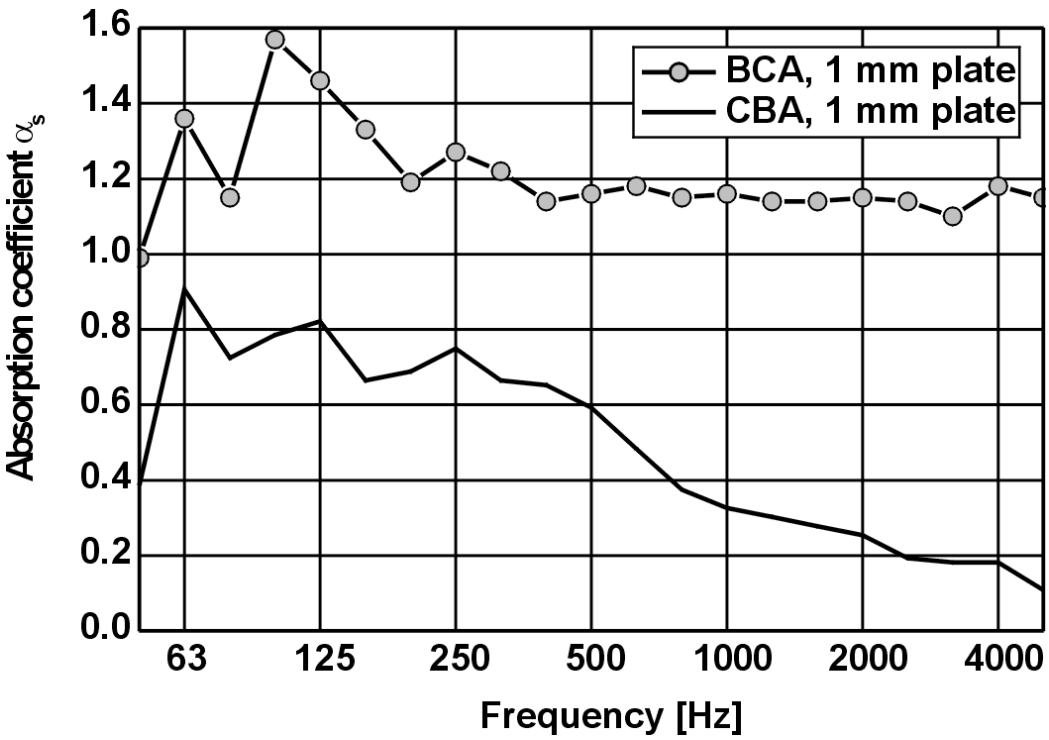

Fig. 10: Absorption coefficient of CBA and BCA modules in the room according to Fig. 8, measurement in 1/3-octave bands

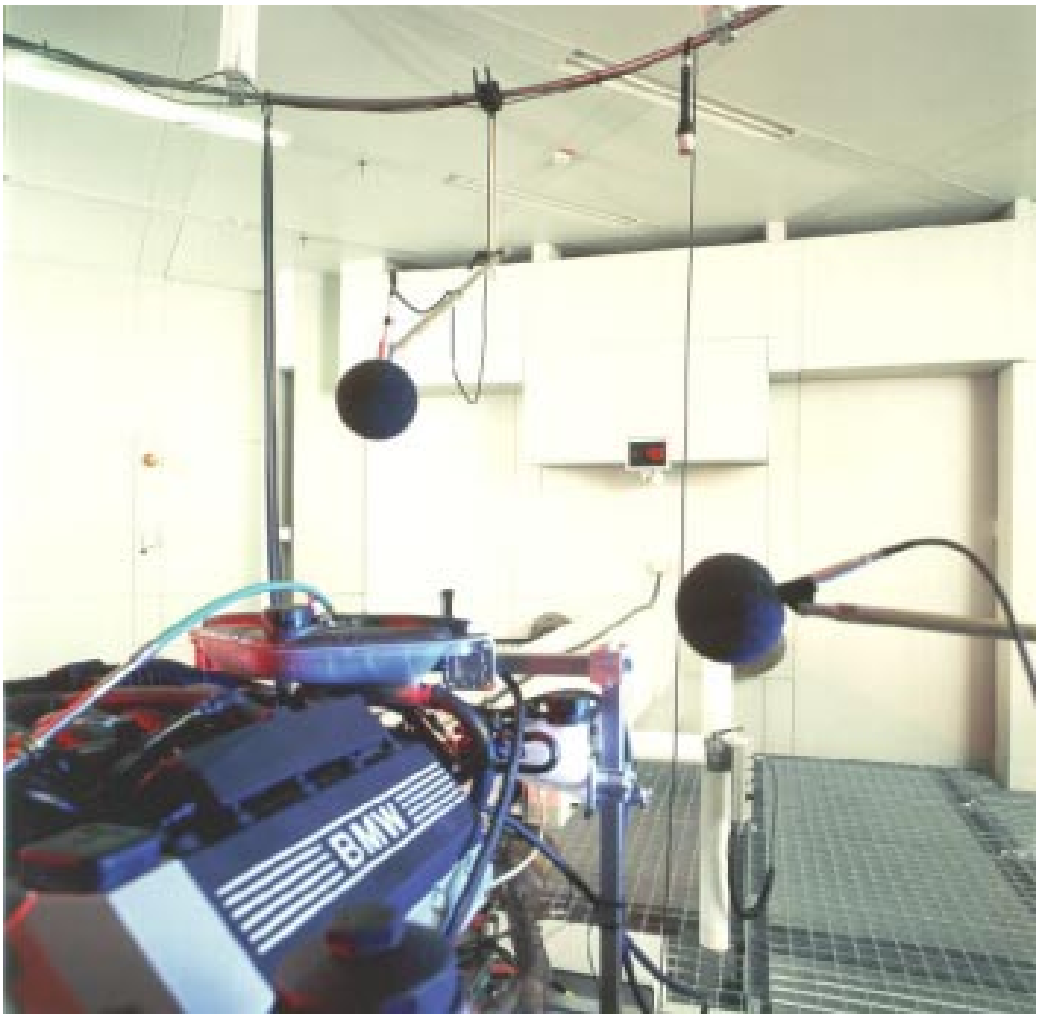

Fig. 11: Photo of the BMW motor test site with BCA wall lining

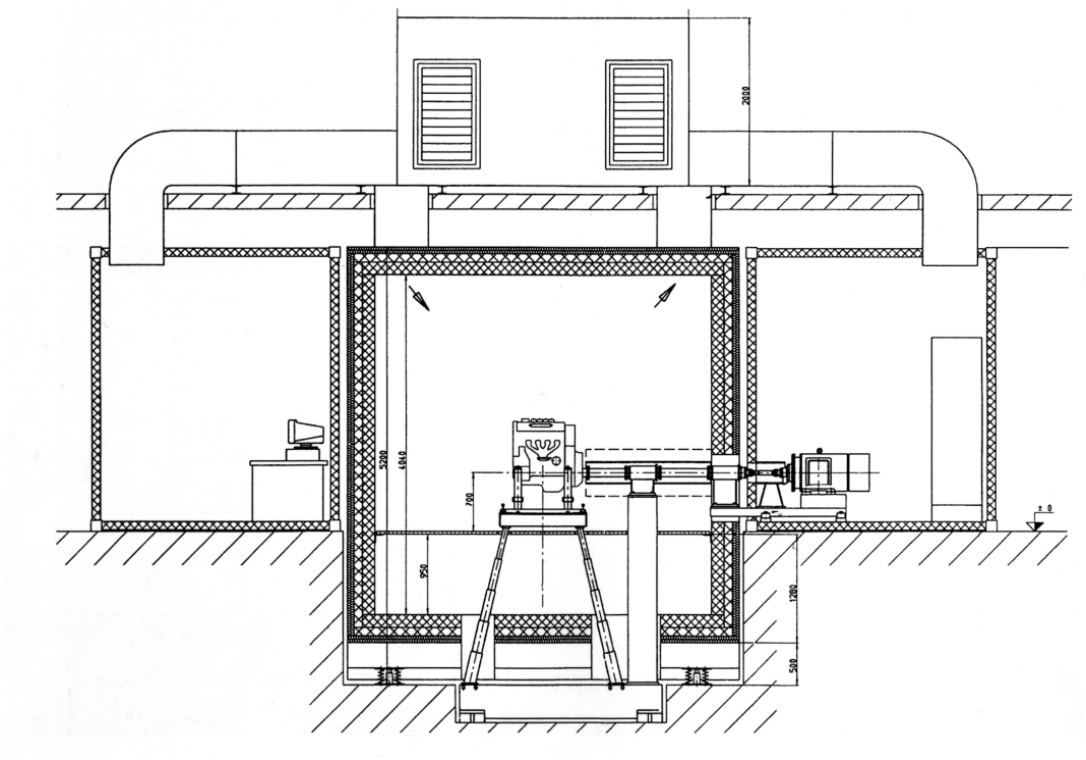

Fig. 12: Cross-section of a motor test stand as free-field room

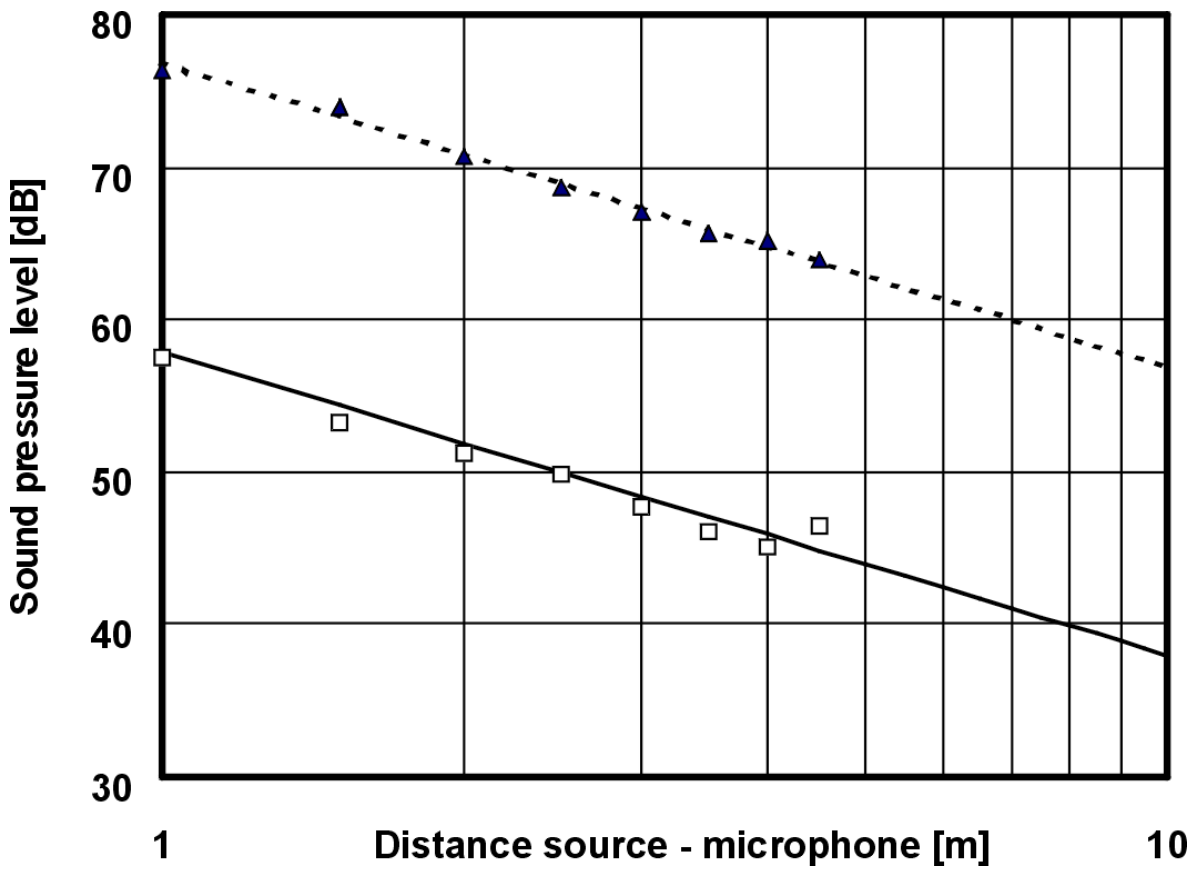

Fig. 13: Sound pressure level decay with distance from the source in an engine test stand [4], for third octaves at 800 Hz (upper curve) and 50 Hz (lower). Lines: theoretical free-field decay, symbols: measurement

Fig. 14: Plenum of the AUDI aero-acoustic wind tunnel with BCA modules as wall lining

Fig. 15: View to one corner of the AUDI aero-acoustic wind tunnel with BCA modules as splitter silencers

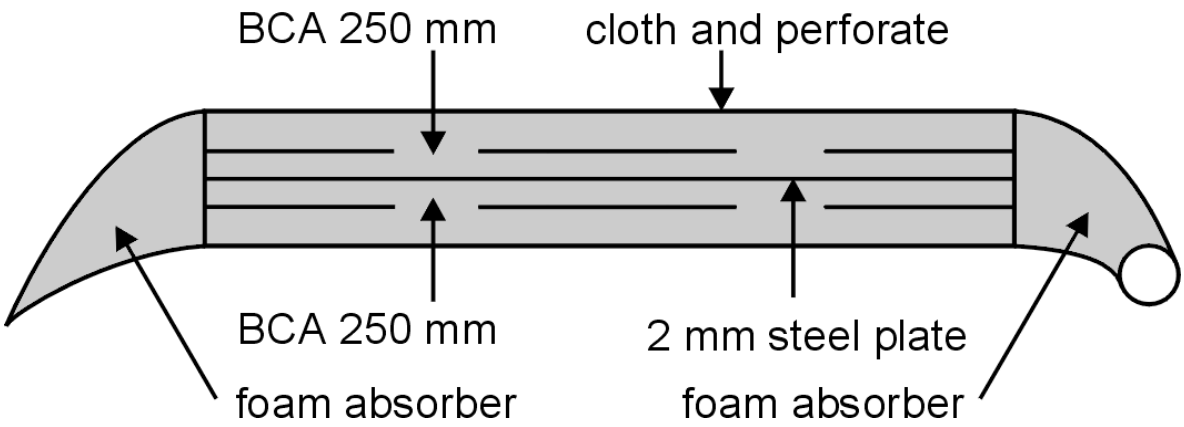

Fig. 16: Sketch of a splitter silencer in one of two corners of the AUDI aero-acoustic wind tunnel

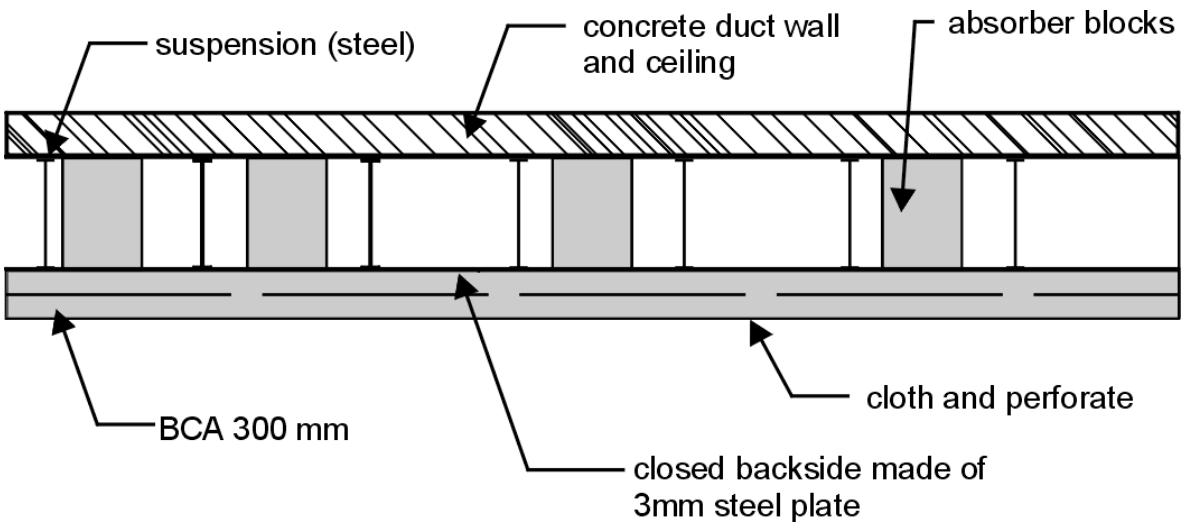

Fig. 17: Sketch of diffuser (collector) section with BCA modules mounted on a suspended construction

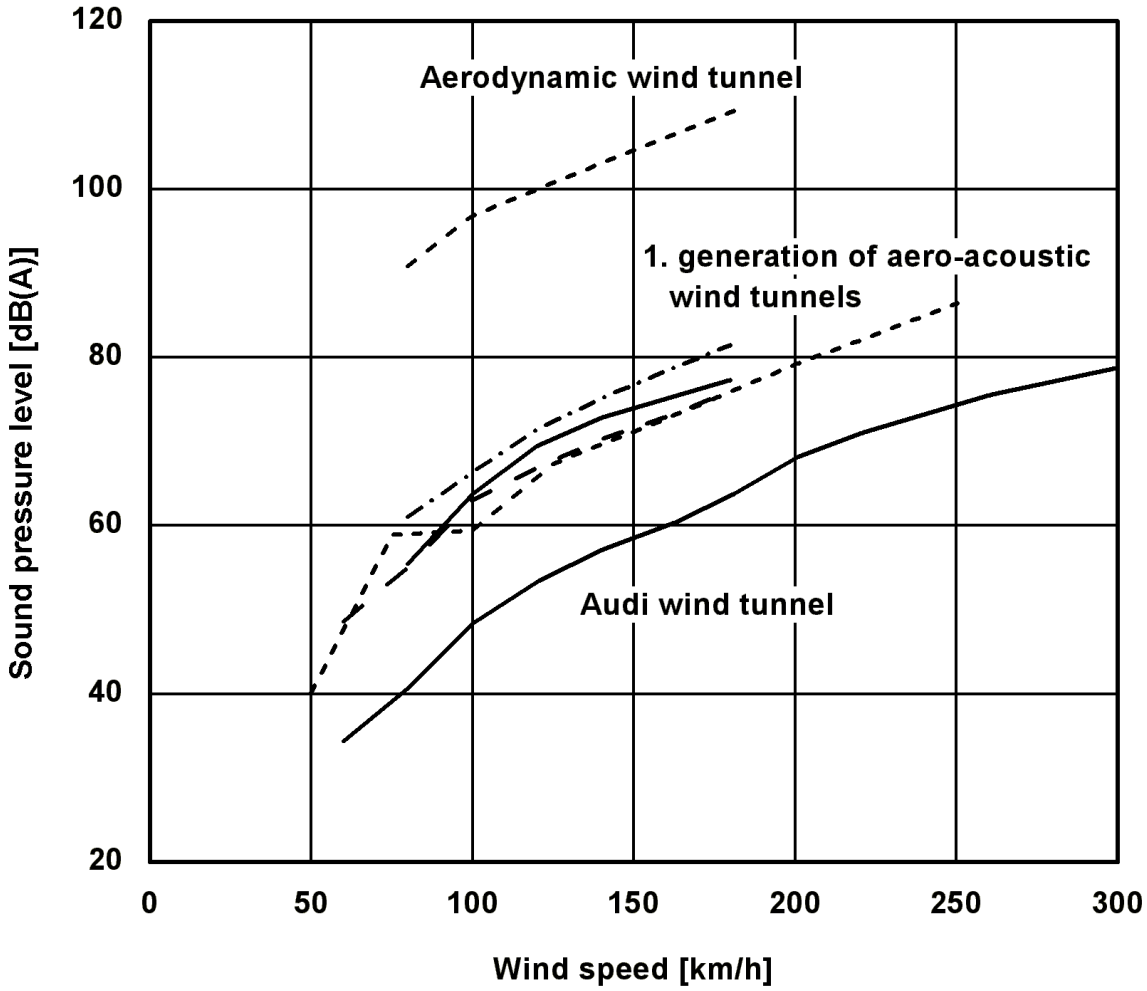

Fig. 18: Sound pressure level as a function of wind speed for different wind tunnels [13,14]